Hydroclic

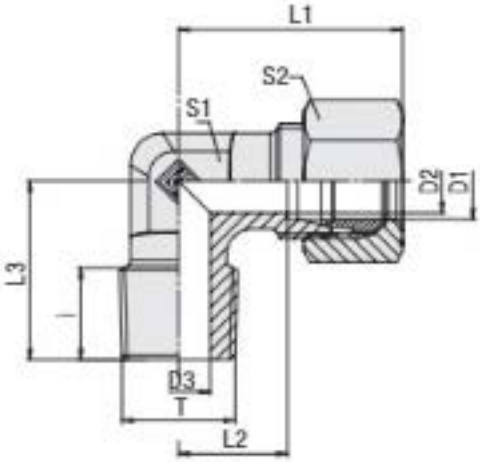

Whitworth Taper Pipe Thread (BSPT)

Series	Tube OD (mm/in) D1	PN (bar/PSI)	Dimensions (mm/in) Thread T	D2	D3	i	L	L1[1]	L2	L3	S1	S2	Weight (kg/lbs) ca. per 100[2]
LL	4	100	R 1/8 keg.	3	3	8	15	21	11	17	11	10	1,46
	.16	1450		.12	.12	.31	.59	.83	.43	.67	.43	.39	3.12
	6	100	R 1/8 keg.	4,5	4,5	8	15	21	9,5	17	11	12	1,73
	.24	1450		.18	.18	.31	.59	.83	.37	.67	.43	.47	3.81
	8	100	R 1/8 keg.	6	6	8	17	23	11,5	20	12	14	2,63
	.31	1450		.24	.24	.31	.67	.91	.45	.79	.47	.55	5.79
	10	100	R 1/4 keg.	8	7	12	21,5	27,5	16	26	14	14	9,10
	.39	1450		.31	.28	.47	.85	1.08	.63	1.02	.55	.55	20.02
	12	100	R 1/4 keg.	10	7	9,9	22	28	16	23	14	17	11,40
	.47	1450		.39	.28	.39	.87	1.10	.63	.91	.55	.67	25.08
L	6	315	R 1/8 keg.	4	4	8	19	27	12	20	12	14	1,96
	.24	4568		.16	.16	.31	.75	1.06	.47	.79	.47	.55	4.32
	6	315	R 1/4 keg.	4	6	12	21	29	14	25,5	12	14	2,93
	.24	4568		.16	.24	.47	.83	1.14	.55	1.00	.47	.55	6.44
	8	315	R 1/8 keg.	6	4	8	21	29	14	26	12	17	2,64
	.31	4568		.24	.16	.31	.83	1.14	.55	1.02	.47	.67	5.80
	8	315	R 1/4 keg.	6	6	12	21	29	14	26	12	17	2,93
	.31	4568		.24	.24	.47	.83	1.14	.55	1.02	.47	.67	6.45
	8	315	R 3/8 keg.	6	9	14	24	32	17	28	14	17	4,34
	.31	4568		.24	.35	.55	.94	1.26	.67	1.10	.55	.67	9.54
	10	315	R 1/4 keg.	8	7	13	22	30	15	27	14	19	3,53
	.39	4568		.31	.28	.51	.87	1.18	.59	1.06	.55	.75	7.76

	10	315	R 3/8 keg.	8	8	12,5	22	30	15	28	14	19	4,29
	.39	4568		.31	.31	.49	.87	1.18	.59	1.10	.55	.75	9.43
	12	315	R 1/4 keg.	10	7	14,3	24	32	17	27	17	22	4,57
	.47	4568		.39	.28	.56	.94	1.26	.67	1.06	.67	.87	10.06
	12	315	R 3/8 keg.	10	9	13	24	32	17	28,5	17	22	5,33
	.47	4568		.39	.35	.51	.94	1.26	.67	1.12	.67	.87	11.72
	12	315	R 1/2 keg.	10	10	14	28	36	21	34	19	22	9,94
	.47	4568		.39	.39	.55	1.10	1.42	.83	1.34	.75	.87	21.87
	15	315	R 3/8 keg.	12	9	14	28	36	21	34	19	27	8,79
	.59	4568		.47	.35	.55	1.10	1.42	.83	1.34	.75	1.06	19.33
	15	315	R 1/2 keg.	12	12	16	28	36	21	34	19	27	9,12
	.59	4568		.47	.47	.63	1.10	1.42	.83	1.34	.75	1.06	20.06
	18	315	R 1/2 keg.	15	14	17,5	31	40	23,5	36	24	32	11,63
	.71	4568		.59	.55	.69	1.22	1.57	.93	1.42	.94	1.26	25.58
	22	160	R 3/4 keg.	19	18	11	35	44	28,5	42,5	27	36	16,80
	.87	2320		.75	.71	.43	1.38	1.73	1.12	1.67	1.06	1.42	36.96
S	6	400	R 1/4 keg.	4	4	12	23	31	16	26	12	17	5,73
	.24	5800		.16	.16	.47	.91	1.22	.63	1.02	.47	.67	12.60
	8	400	R 1/4 keg.	5	5	13	24	32	17	27	14	19	4,70
	.31	5800		.20	.20	.51	.94	1.26	.67	1.06	.55	.75	10.34
	10	400	R 1/4 keg.	7	5	13	25	34	17,5	28	17	22	5,94
	.39	5800		.28	.20	.51	.98	1.34	.69	1.10	.67	.87	13.06
	10	400	R 3/8 keg.	7	7	13	25	34	17,5	28	17	22	6,71
	.39	5800		.28	.28	.51	.98	1.34	.69	1.10	.67	.87	14.77
	12	400	R 3/8 keg.	8	7	12	29	38	21,5	28	17	24	7,78
	.47	5800		.31	.28	.47	1.14	1.50	.85	1.10	.67	.94	17.12
	12	400	R 1/2 keg.	8	10	14	30	39	22,5	32	19	24	4,67
	.47	5800		.31	.39	.55	1.18	1.54	.89	1.26	.75	.94	10.27
	14	400	R 1/2 keg.	10	10	14	30	40	22	32	19	27	10,53
	.55	5800		.39	.39	.55	1.18	1.57	.87	1.26	.75	1.06	23.17
	16	400	R 1/2 keg.	12	12	14	34	44	25,5	32	24	30	13,60
	.63	5800		.47	.47	.55	1.34	1.73	1.00	1.26	17.8	66.0	29.92
	16	400	R 3/4 keg.	12	12	14	34	44	25,5	32	24	30	22,00
	.63	5800		.47	.47	.55	1.34	1.73	1.00	1.26	.94	1.18	48.40
	20	400	R 1/2 keg.	16	10	14	37	48	26,5	42	27	36	21,00
	.79	5800		.63	.39	.55	1.46	1.89	1.04	1.65	1.06	1.42	46.20